Side Storage Wardrobe
9091XXXCOM

Ameriwood HOME

Area Behind Doors:
Width: 26.9 in. (68.4 cm)
Depth: 13.4 in. (34 cm)
Height: 64.3 in. (163.4 cm)
3 adjustable shelves behind doors.

Adjustable Shelf spacing holes - 2-½"

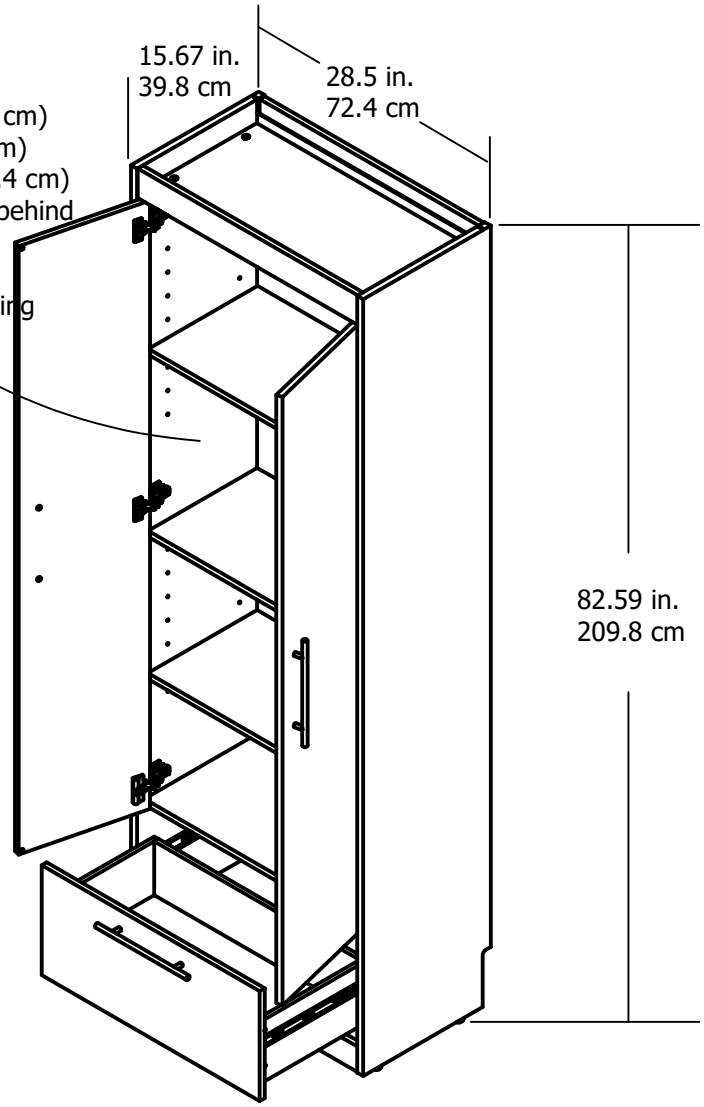

Wood Breakdown:
PB 95%
Total storage: 15.13 cubic feet

Overall Product Size:
82.59"H x 28.5"W x 15.67"D
209.8cm H x 72.4cm W x 39.8cm D

Weight Limits:
Top Shelf - 10 lbs
Wardrobe Rail - 15 lbs
Adjustable Shelves - 30 lbs ea
Lower Shelf - 40 lbs
Drawer 25 lbs

A81930 Wardrobe Rail (Optional)

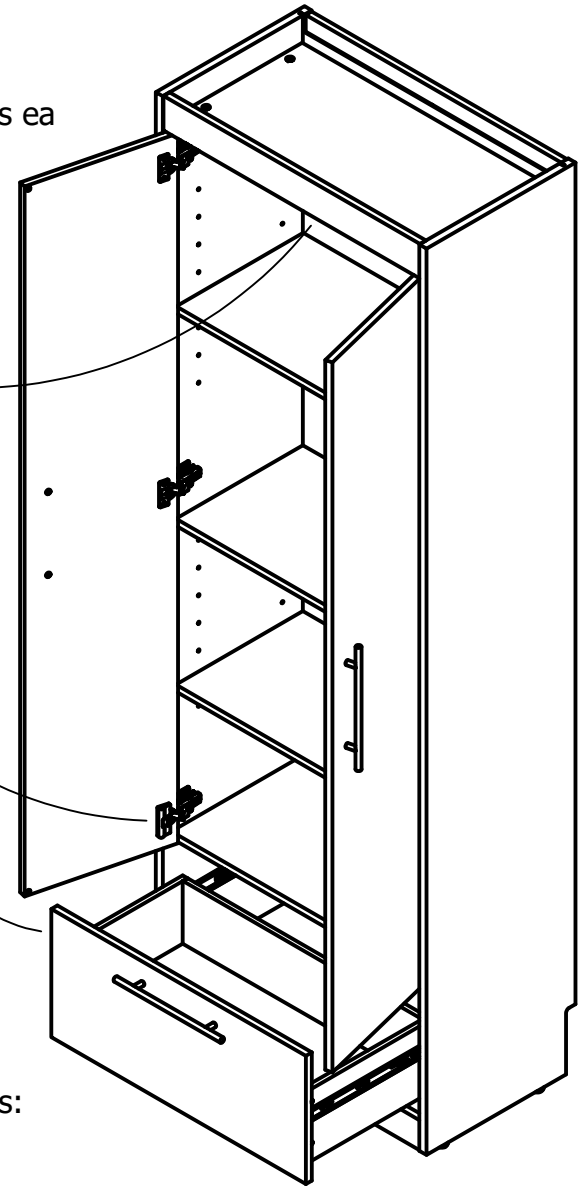

Glissando Soft Close

A56541 3/4 Ext Slide

Interior Drawer dimensions:
25.2 in. (60 cm) W
5.7 in. (14.5 cm) H
11.9 in. (30.2 cm) D
0.93 cubic feet each storage area

Maximum Weight Capacities
Unit Weight:145.9 lbs. (66.32 kg)